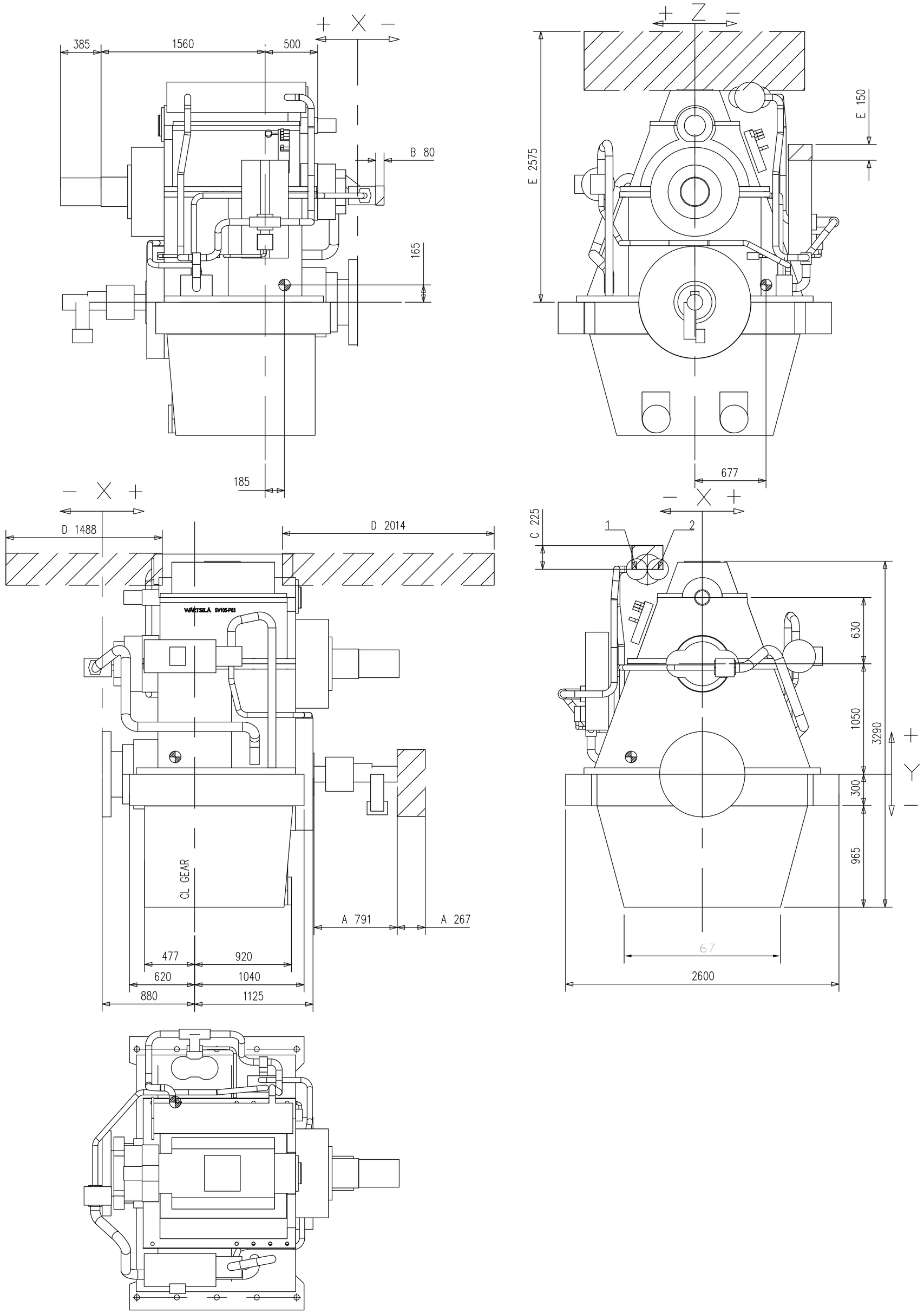

CENTER OF GRAVITY

DRY WEIGHT – APPX.31000 kg

Pos.	Description
2	Cooling water out
1	Cooling water in

A. Service space for Oo box
B. Service space for Gear pump
C. Service space for cooler anode exhange
D. Service space for cooler
E. Service space for LP filter
E. Service space for Gear housing top

Design/Draw: Propulsion	Scale: 1:20	Material: –	
Check:		Standard: –	
Appr.: –		Model dwg.: –	Weight Kg.: –
WÄRTSILÄ		Title: SV105–P63 GEAR BOX OUTLINE AND SERVICE SPACE	
		Dwg. no.: DAAL000633	Rev.:
		Klasskode:	Size: A1 / Page no.: 1/1 / Spare part group.: –

This drawing is the property of Wärtsilä Propulsion Norway AS, and shall neither be copied, shown nor communicated to a third party without approval of the owner.