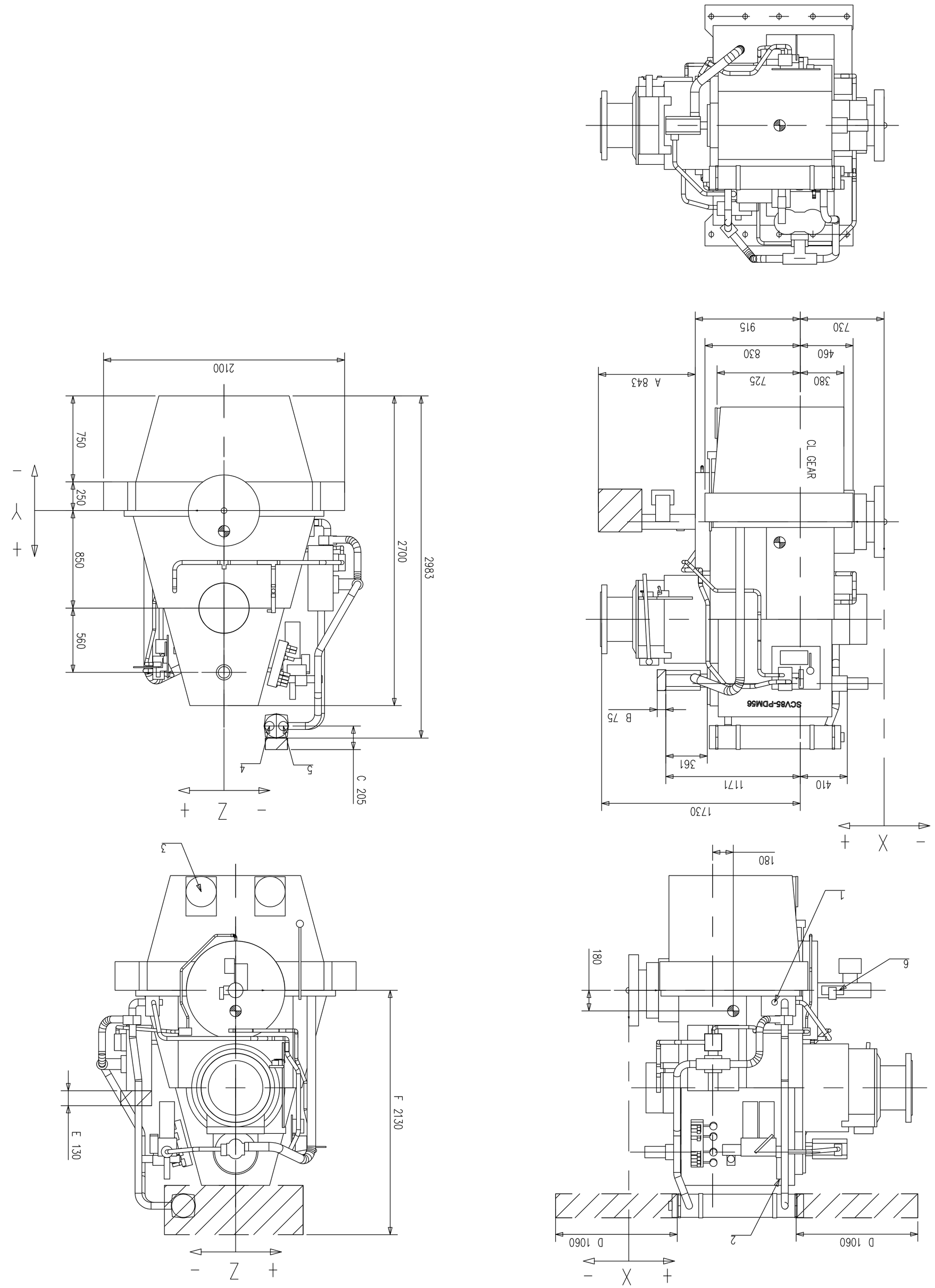

CENTER OF GRAVITY
DRY WEIGHT –APPX. 14500 kg

6	To header tank
5	Cooling water out
4	Cooling water in
3	Suction stand–by oil pump
2	From stand–by oil pump, low pressure
1	From stand–by oil pump, high pressure

A. Service space for OD box
B. Service space for Gear pump
C. Service space for cooler anode exhange
D. Service space for cooler
E. Service space for LP filter

Design/Drawn: Propulsion	Scale: 1:20	Material: –	
Check: –		Standard: –	
Appr.: –		Model drwg.: –	Weight kg.: –
		Title: SCV85–PDM56 GEARBOX OUTLINE AND SERVICE SPACE	
		Drwg. no.: DAAL000625	Rev.:
		Kommode:	Size: A1 Page no.: 1/1 Spare part group.: –

WÄRTSILÄ

This drawing is the property of Wärtsilä Propulsion Norway AS, and shall neither be copied, shown nor communicated to a third party without approval of the owner.